Models GSR-T and GSR-V

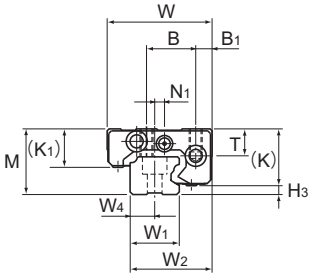

Model GSR15T/V

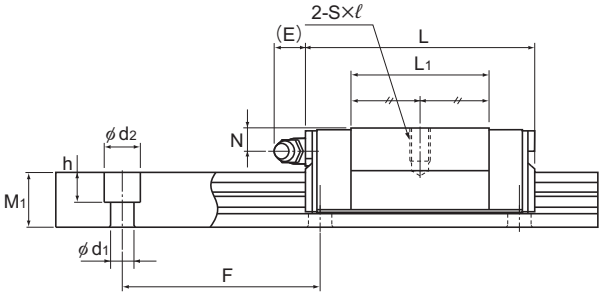

Models GSR15 to 25V

Model No.	Outer dimensions			LM block dimensions												
	Height M	Width W	Length L	B_1	B	C	S×ℓ	L_1	T	K	K_1	N	N_1	E	Grease nipple	H_3
GSR 15V GSR 15T	20	32	47.1 59.8	5	15	— 26	M4×7	27.5 40.2	8.25	16.8	12	4.5	3	5.5	PB107	3.2
GSR 20V GSR 20T	24	43	58.1 74	7	20	— 30	M5×8	34.3 50.2	9.7	20.6	13.6	5	—	12	B-M6F	3.4
GSR 25V GSR 25T	30	50	69 88	7	23	— 40	M6×10	41.2 60.2	12.7	25.4	16.8	7	—	12	B-M6F	4.6
GSR 30T	33	57	103	8	26	45	M8×12	70.3	14.6	28.5	18	7	—	12	B-M6F	4.5
GSR 35T	38	68	117	9	32	50	M8×15	80.3	15.6	32.5	20.5	8	—	12	B-M6F	5.5

Model number coding

Combination of LM rail and LM block

GSR25 T 2 UU +1060L H T K

- GSR25: Model number
- T: Type of LM block
- 2: No. of LM blocks used on the same rail
- UU: Contamination protection accessory symbol (*1)
- +1060L: LM rail length (in mm)
- H: Accuracy symbol (*2) Normal grade (No Symbol)/High accuracy grade (H) Precision grade (P)
- T: Symbol for LM rail jointed use
- K: Symbol for tapped-hole LM rail type

(*1) See contamination protection accessory on A1-496. (*2) See A1-81.

Note) One set of model GSR: This model number indicates that a single-rail unit constitutes one set.

Download data by searching for the corresponding model number on the Technical Support site. https://tech.thk.com

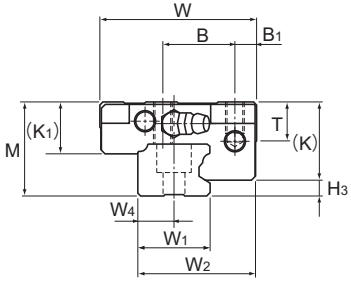

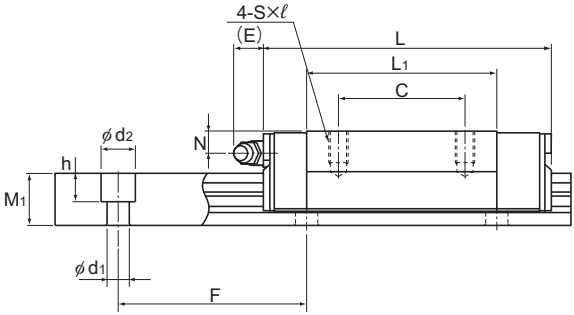

Models GSR20 to 35T, Models GSR20V and 25V

Models GSR15 to 35T

Unit: mm

	LM rail dimensions							Basic load rating		Static permissible moment kN-m*				Mass	
	Width			Height	Pitch		Length*	C	C_0	M_A		M_B		LM block	LM rail
	W_1	W_2	W_4	M_1	F	$d_1 \times d_2 \times h$	Max	kN	kN	1 block	Double blocks	1 block	Double blocks	kg	kg/m
	15	25	7.5	11.5	60	4.5×7.5×5.3	2000	6.51 8.42	6.77 9.77	0.0305 0.0606	0.19 0.337	0.0264 0.0523	0.165 0.29	0.08 0.13	1.2
	20	33	10	13	60	6×9.5×8.5	3000	10.5 13.6	10.6 15.3	0.06 0.118	0.368 0.652	0.052 0.102	0.318 0.562	0.17 0.25	1.8
	23	38	11.5	16.5	60	7×11×9	3000	15.5 20	15.2 22	0.102 0.205	0.625 1.11	0.0891 0.176	0.541 0.961	0.29 0.5	2.6
	28	44.5	14	19	80	9×14×12	3000	27.8	29.9	0.325	1.77	0.28	1.52	0.6	3.6
	34	54	17	22	80	11×17.5×14	3000	37	39.1	0.485	2.63	0.419	2.27	1	5

Note1) The maximum length under "Length*" indicates the standard maximum length of an LM rail. (See A**1-278**.)
Static permissible moment* 1 block: the static permissible moment with one LM block
Double blocks: static permissible moment when two LM blocks are in close contact with each other
A moment in the M_C direction can be received if two rails are used in parallel. However, since it depends on the distance between the two rails, it has been omitted.
Total block length L : The total block length L shown in the table is the length with the dust proof parts, code UU or SS. If other contamination protection accessories or lubricant equipment are installed, the total block length will increase. (See A**1-472** or A**1-492**)
For oil lubrication, be certain to contact THK with the mounting orientation.
(Mounting orientation: see A**1-12**, Lubricant: see A**24-2**)
Note2) The basic load rating in the dimension table is for a load in the radial direction. Use Table7 on A**1-58** to calculate the load rating for loads in the reverse radial direction or lateral direction.

Model number coding

LM block

GSR25 T UU

- GSR25: Model number
- T: Type of LM block
- UU: Contamination protection accessory symbol (*1)

LM rail

GSR25 -1060L H K

- GSR25: Model number
- -1060L: LM rail length (in mm)
- H: Symbol for tapped-hole LM rail type
- K: Accuracy symbol (*2)
  Normal grade (No Symbol)
  High accuracy grade (H)
  Precision grade (P)

(*1) See contamination protection accessory on A**1-496**. (*2) See A**1-81**.

Options⇒A**1-459**