Models SSR-XW and SSR-XWM

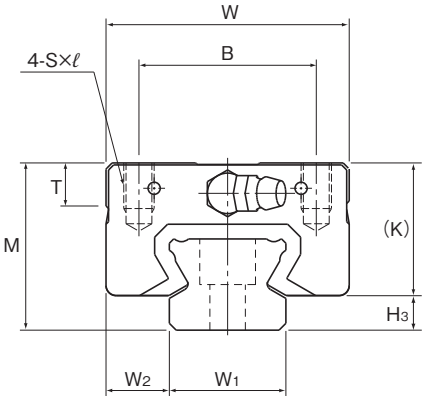

Model No.	Outer dimensions			LM block dimensions												
	Height M	Width W	Length L	B	C	S×ℓ	L_1	T	K	N	E	f_0	e_0	D_0	Grease nipple	H_3
SSR 15XW SSR 15XWM	24	34	56.9	26	26	M4×7	39.9	6.5	19.5	4.5	5.5	2.7	4.5	3	PB1021B	4.5
SSR 20XW SSR 20XWM	28	42	66.5	32	32	M5×8	46.6	8.2	22	5.5	12	2.9	5.2	3	B-M6F	6
SSR 25XW SSR 25XWM	33	48	83	35	35	M6×9	59.8	8.4	26.2	6	12	3.3	6.8	3	B-M6F	6.8
SSR 30XW SSR 30XWM	42	60	97	40	40	M8×12	70.7	11.3	32.5	8	12	4.5	7.6	4	B-M6F	9.5
SSR 35XW	48	70	110.9	50	50	M8×12	80.5	13	36.5	8.5	12	4.7	8.8	4	B-M6F	11.5

Note) The M in the model number symbol indicates that the LM block, LM rail and balls are made of stainless steel.
The stainless steel provides excellent corrosion and environmental resistance.

Model number coding

SSR25X W 2 QZ UU C1 M +1200L Y P T M -Ⅱ

- SSR25X: Model number
- W: Type of LM block
- 2: No. of LM blocks used on the same rail
- QZ: With QZ lubricator
- UU: Contamination protection accessory symbol (*1)
- C1: Radial clearance symbol (*2) Normal (No symbol) Light preload (C1)
- M: Stainless steel LM block
- +1200L: LM rail length (in mm)
- Y: Applied to only 15 and 25
- P: Accuracy symbol (*3) Normal grade (No Symbol) High accuracy grade (H)/Precision grade (P) Super precision grade (SP)/Ultra precision grade (UP)
- T: Symbol for LM rail jointed use
- M: Stainless steel LM rail
- -Ⅱ: Symbol for No. of rails used on the same plane (*4)

(*1) See contamination protection accessory on A1-496. (*2) See A1-70. (*3) See A1-76. (*4) See A1-13.

Note) This model number indicates that a single-rail unit constitutes one set. (i.e., required number of sets when 2 rails are used in parallel is 2 at a minimum.)
Those models equipped with QZ Lubricator cannot have a grease nipple. When desiring a grease nipple for a model attached with QZ, contact THK.

Download data by searching for the corresponding model number on the Technical Support site. https://tech.thk.com

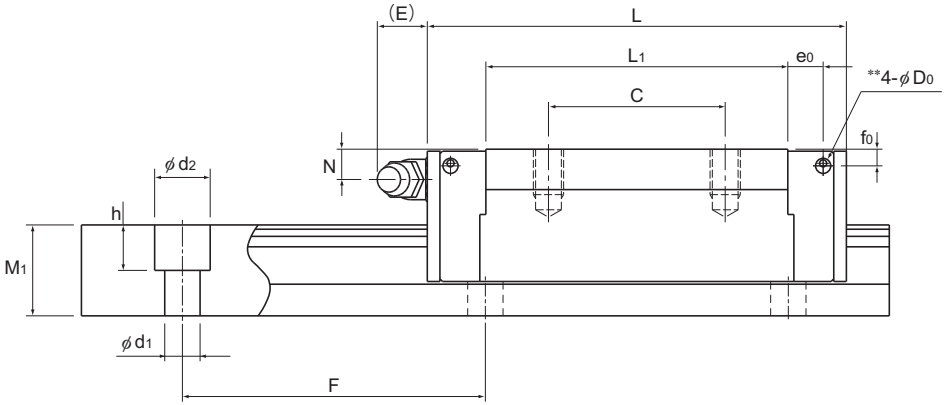

Unit: mm

	LM rail dimensions						Basic load rating		Static permissible moment kN-m*					Mass	
	Width		Height	Pitch		Length*	C	C_0	M_A		M_B		M_C	LM block	LM rail
	W_1 ±0.05	W_2	M_1	F	$d_1 \times d_2 \times h$	Max	kN	kN	1 block	Double blocks	1 block	Double blocks	1 block	kg	kg/m
	15	9.5	12.5	60	4.5×7.5×5.3	3000 (1240)	14.7	16.5	0.0792	0.44	0.0486	0.274	0.0962	0.15	1.2
	20	11	15.5	60	6×9.5×8.5	3000 (1480)	19.6	23.4	0.138	0.723	0.0847	0.448	0.18	0.25	2.1
	23	12.5	18	60	7×11×9	3000 (2020)	31.5	36.4	0.258	1.42	0.158	0.884	0.33	0.4	2.7
	28	16	23	80	7×11×9	3000 (2520)	46.5	52.7	0.446	2.4	0.274	1.49	0.571	0.8	4.3
	34	18	27.5	80	9×14×12	3000	64.6	71.6	0.711	3.72	0.437	2.31	0.936	1.1	6.4

Note1) The maximum length under "Length*" indicates the standard maximum length of an LM rail. (See A**1-114**.)
Static permissible moment* 1 block: the static permissible moment with one LM block
Double blocks: static permissible moment when two LM blocks are in close contact with each other
Total block length L : The total block length L shown in the table is the length with the dust proof parts, code UU or SS. If other contamination protection accessories or lubricant equipment are installed, the total block length will increase.
(See A**1-472** or A**1-492**)

** A pilot hole for side nipples, when a grease nipple for a model equipped with LaCS or QZ Lubricator is needed.
Pilot holes for side nipples are not drilled through for models other than those stated above.
For grease nipple mount machining, contact THK.

Note2) For models SSR15 and 25, two types of rails with different mounting hole dimensions are offered (see Table1). When, replacing this model with model SR, pay attention to the mounting hole dimension of the LM rail. Contact THK for details.

Note3) The basic load rating in the dimension table is for a load in the radial direction. Use Table7 on A**1-58** to calculate the load rating for loads in the reverse radial direction or lateral direction.

Table1 The dimension of the rail mounting hole

Model No.	Standard rail	Semi-Standard rail
SSR 15	For M4 (Symbol Y)	For M3 (No symbol)
SSR 25	For M6 (Symbol Y)	For M5 (No symbol)

Options⇒A**1-459**